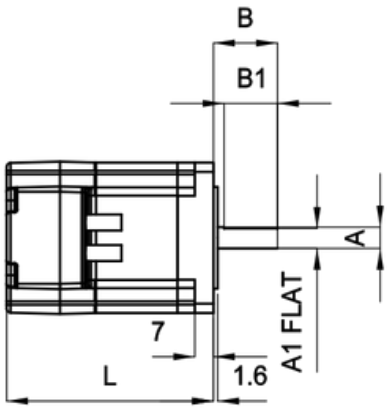

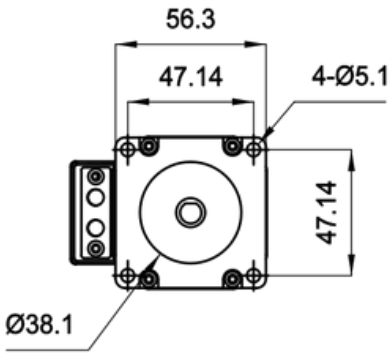

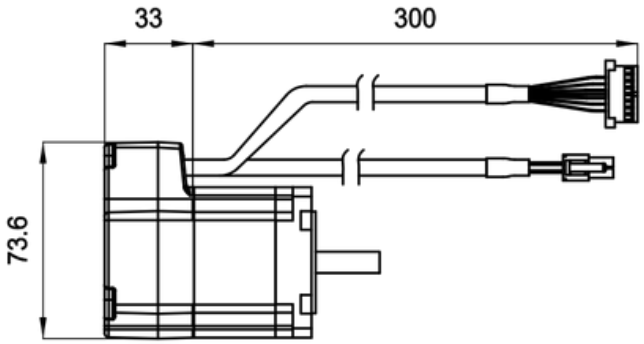

Compatible model [mm]					
MODEL	A	A1	B	B1	L
AM23RS2DMA	Ø8	7.5	24	20	77.5
AM23RS2DMB	Ø6.35	5.85	20	15	77.5
AM23RS3DMA	Ø8	7.5	24	20	99.5
AM23RS3DMB	Ø6.35	5.85	20	15	99.5
AM23RS4DMA	Ø8	7.5	24	20	102.5

REV.	REVISION RECORD	DATE
	Original revision	

Unit: mm

FIRST ANGLE METHOD

Tolerances for linear and angular dimensions without individual tolerance indications
GB/T 1804-m eqv ISO 2768-1 : m

Geometrical tolerance for features without individual tolerance indications
GB/T 1184-K eqv ISO 2768-2 : K

UNLESS OTHERWISE SPECIFIED

	NAMES	SIGNATURE	DATE
Approve			
Standard			
Technology			
Check			
Design			

PIVEXIN TECHNOLOGY

RS Motor

This ducument is released for information only. Its reproduction in whole or in part or its dissemination to third parties is prohibited. All trademarks and registered trademarks appearing on this document are the property of their respective owners.

SCALE 1:1 | Sheet 1 of 1